Chapter 11: File System

Objectives

- To explain the function of file systems
- To describe the interfaces to file systems
- To discuss file-system design tradeoffs, including access methods, file sharing, file locking, and directory structures
- To explore file-system protection

File Concept

- Contiguous logical address space
- Types:
  - Data
    - numeric
    - character
    - binary
  - Program

File Structure

- None - sequence of words, bytes
- Simple record structure
  - Lines
  - Fixed length
  - Variable length
- Complex Structures
  - Formatted document
  - Relocatable load file
- Can simulate last two with first method by inserting appropriate control characters
- Who decides:
  - Operating system
  - Program

File Attributes

- **Name** – only information kept in human-readable form
- **Identifier** – unique tag (number) identifies file within file system
- **Type** – needed for systems that support different types
- **Location** – pointer to file location on device
- **Size** – current file size
- **Protection** – controls who can do reading, writing, executing
- **Time, date, and user identification** – data for protection, security, and usage monitoring
- Information about files are kept in the directory structure, which is maintained on the disk

File Operations

- File is an **abstract data type**
- **Create**
- **Write**
- **Read**
- **Reposition within file**
- **Delete**
- **Truncate**
- *Open(F_i)* – search the directory structure on disk for entry F_i, and move the content of entry to memory
- *Close (F_i)* – move the content of entry F_i in memory to directory structure on disk

Open Files

- Several pieces of data are needed to manage open files:
  - File pointer: pointer to last read/write location, per process that has the file open
  - File-open count: counter of number of times a file is open – to allow removal of data from open-file table when last processes closes it
  - Disk location of the file: cache of data access information
  - Access rights: per-process access mode information

Open File Locking

- Provided by some operating systems and file systems
- Mediates access to a file
- Mandatory or advisory:
  - **Mandatory** – access is denied depending on locks held and requested
  - **Advisory** – processes can find status of locks and decide what to do

File Locking Example – Java API

```
import java.io.*;
import java.nio.channels.*;
public class LockingExample {
    public static final boolean EXCLUSIVE = false;
    public static final boolean SHARED = true;
    public static void main(String arsg[]) throws IOException {
        FileLock sharedLock = null;
        FileLock exclusiveLock = null;
        try {
            RandomAccessFile raf = new RandomAccessFile("file.txt", "rw");
            // get the channel for the file
            FileChannel ch = raf.getChannel();
            // this locks the first half of the file - exclusive
            exclusiveLock = ch.lock(0, raf.length()/2, EXCLUSIVE);
            /** Now modify the data . . . */
            // release the lock
            exclusiveLock.release();
```

File Locking Example – Java API (cont)

```
                // this locks the second half of the file - shared
                sharedLock = ch.lock(raf.length()/2+1, raf.length(),
                                     SHARED);
                /** Now read the data . . . */
                // release the lock
                sharedLock.release();
        } catch (java.io.IOException ioe) {
                System.err.println(ioe);
        }finally {
                if (exclusiveLock != null)
                exclusiveLock.release();
                if (sharedLock != null)
                sharedLock.release();
        }
    }
}
```

File Types – Name, Extension

file type	usual extension	function
executable	exe, com, bin or none	ready-to-run machine-language program
object	obj, o	compiled, machine language, not linked
source code	c, cc, java, pas, asm, a	source code in various languages
batch	bat, sh	commands to the command interpreter
text	txt, doc	textual data, documents
word processor	wp, tex, rtf, doc	various word-processor formats
library	lib, a, so, dll	libraries of routines for programmers
print or view	ps, pdf, jpg	ASCII or binary file in a format for printing or viewing
archive	arc, zip, tar	related files grouped into one file, sometimes compressed, for archiving or storage
multimedia	mpeg, mov, rm, mp3, avi	binary file containing audio or A/V information

Access Methods

- **Sequential Access**

  read next
  write next
  reset
  no read after last write
  (rewrite)

- **Direct Access**

  read *n*
  write *n*
  position to *n*
  read next
  write next
  rewrite *n*

  n = relative block number

Sequential-access File

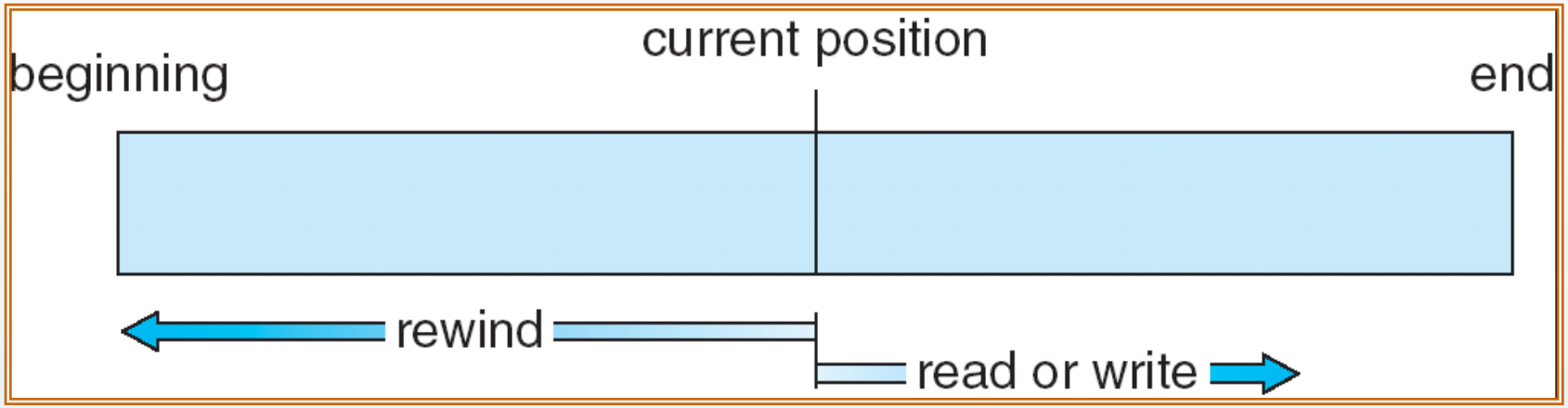

Simulation of Sequential Access on a Direct-access File

sequential access	implementation for direct access
reset	$cp = 0;$
read next	*read cp*; $cp = cp + 1;$
write next	*write cp*; $cp = cp + 1;$

Directory Structure

- A collection of nodes containing information about all files

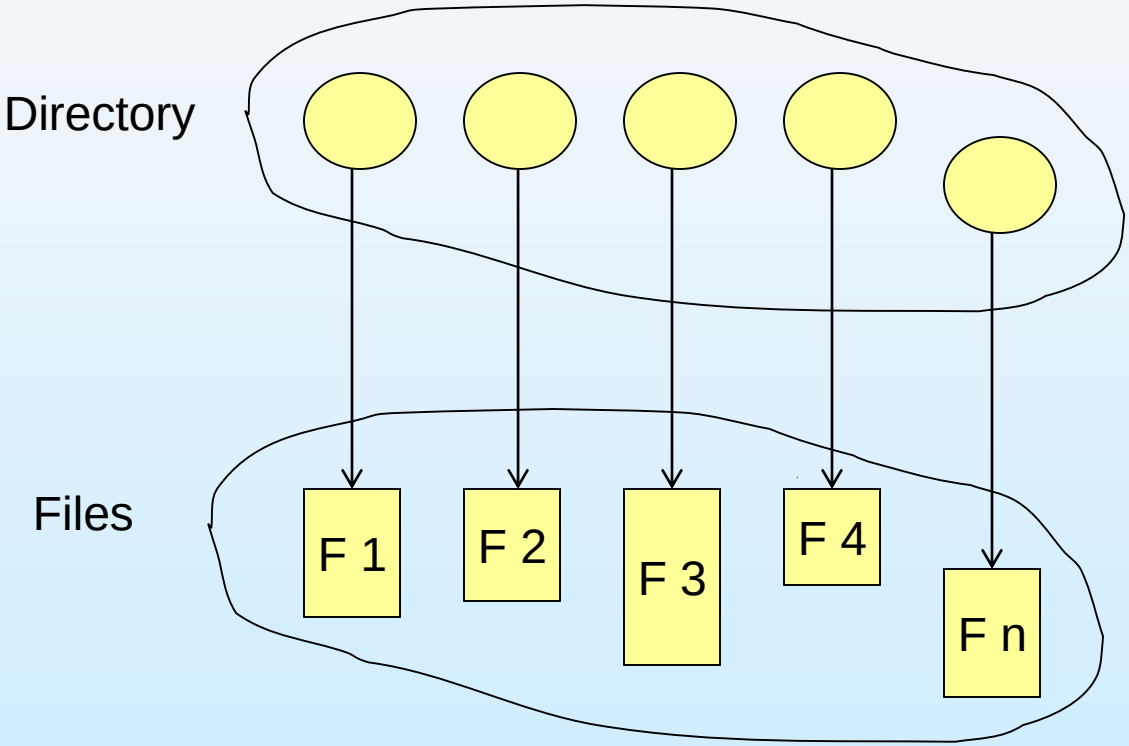

Both the directory structure and the files reside on disk
Backups of these two structures are kept on tapes

A Typical File-system Organization

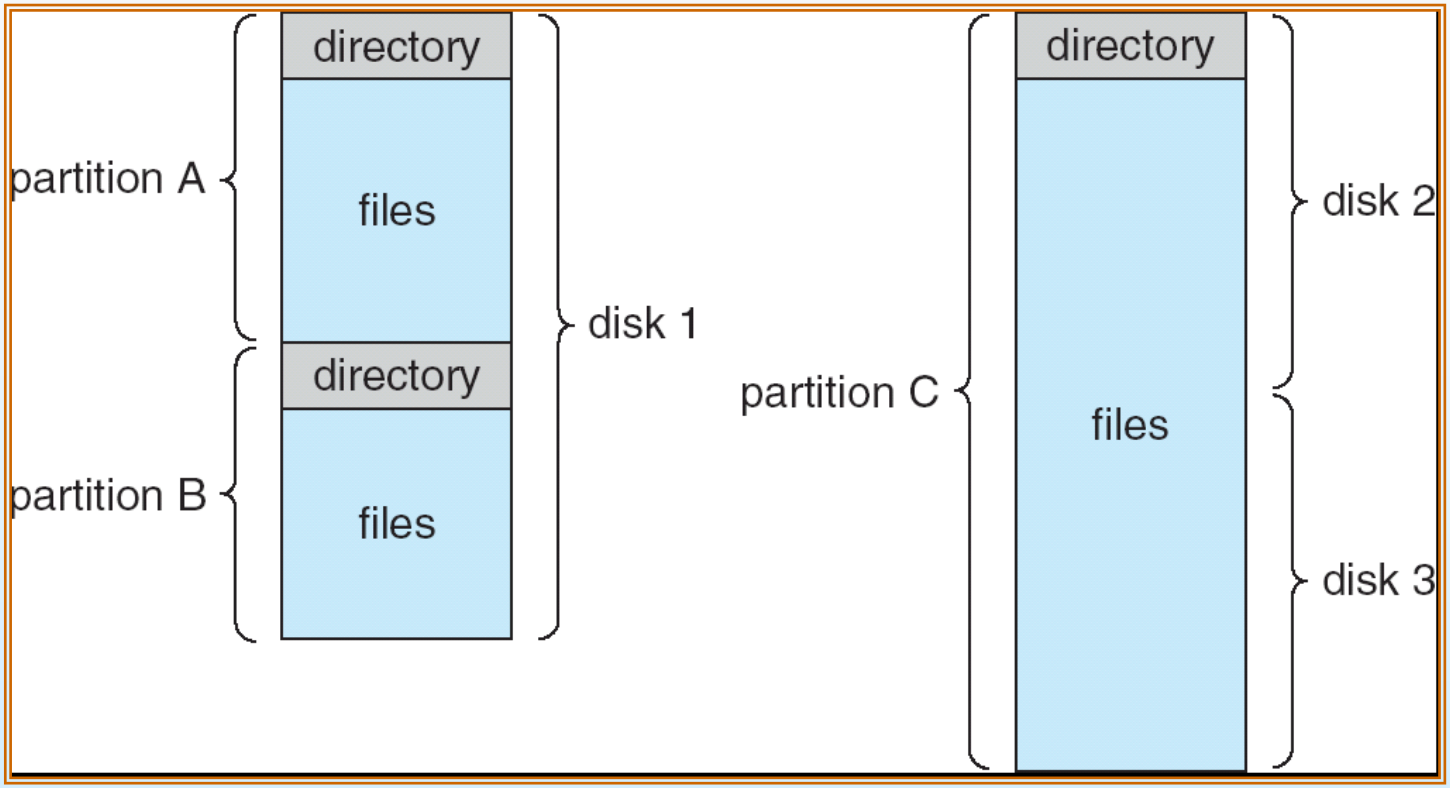

Operations Performed on Directory

- Search for a file
- Create a file
- Delete a file
- List a directory
- Rename a file
- Traverse the file system

Organize the Directory (Logically) to Obtain

- Efficiency – locating a file quickly
- Naming – convenient to users
  - Two users can have same name for different files
  - The same file can have several different names
- Grouping – logical grouping of files by properties, (e.g., all Java programs, all games, …)

Single-Level Directory

- A single directory for all users

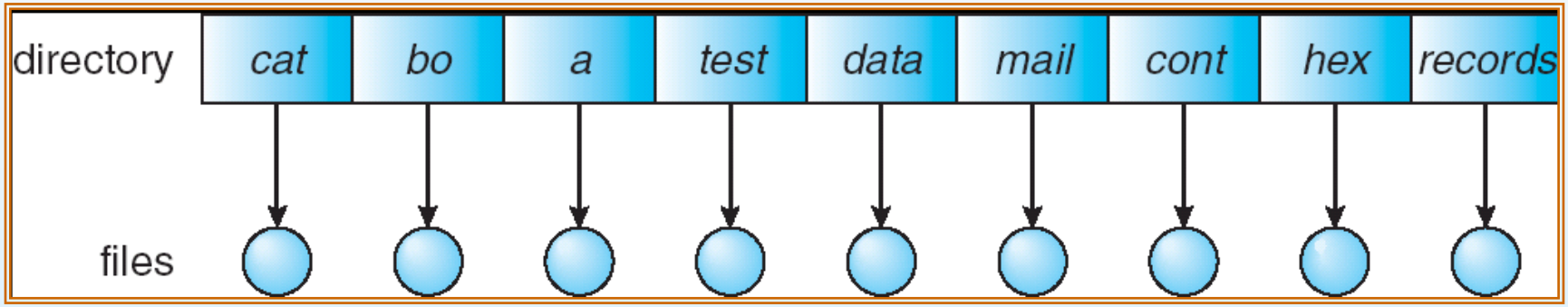

Naming problem

Grouping problem

Two-Level Directory

- Separate directory for each user

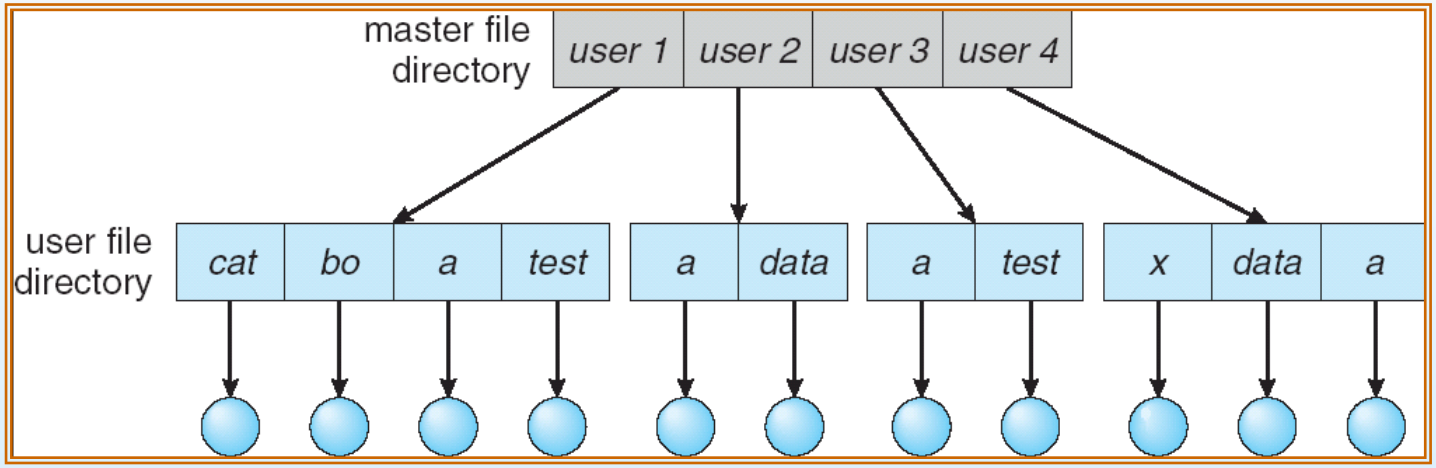

- Path name
- Can have the same file name for different user
- Efficient searching
- No grouping capability

Tree-Structured Directories

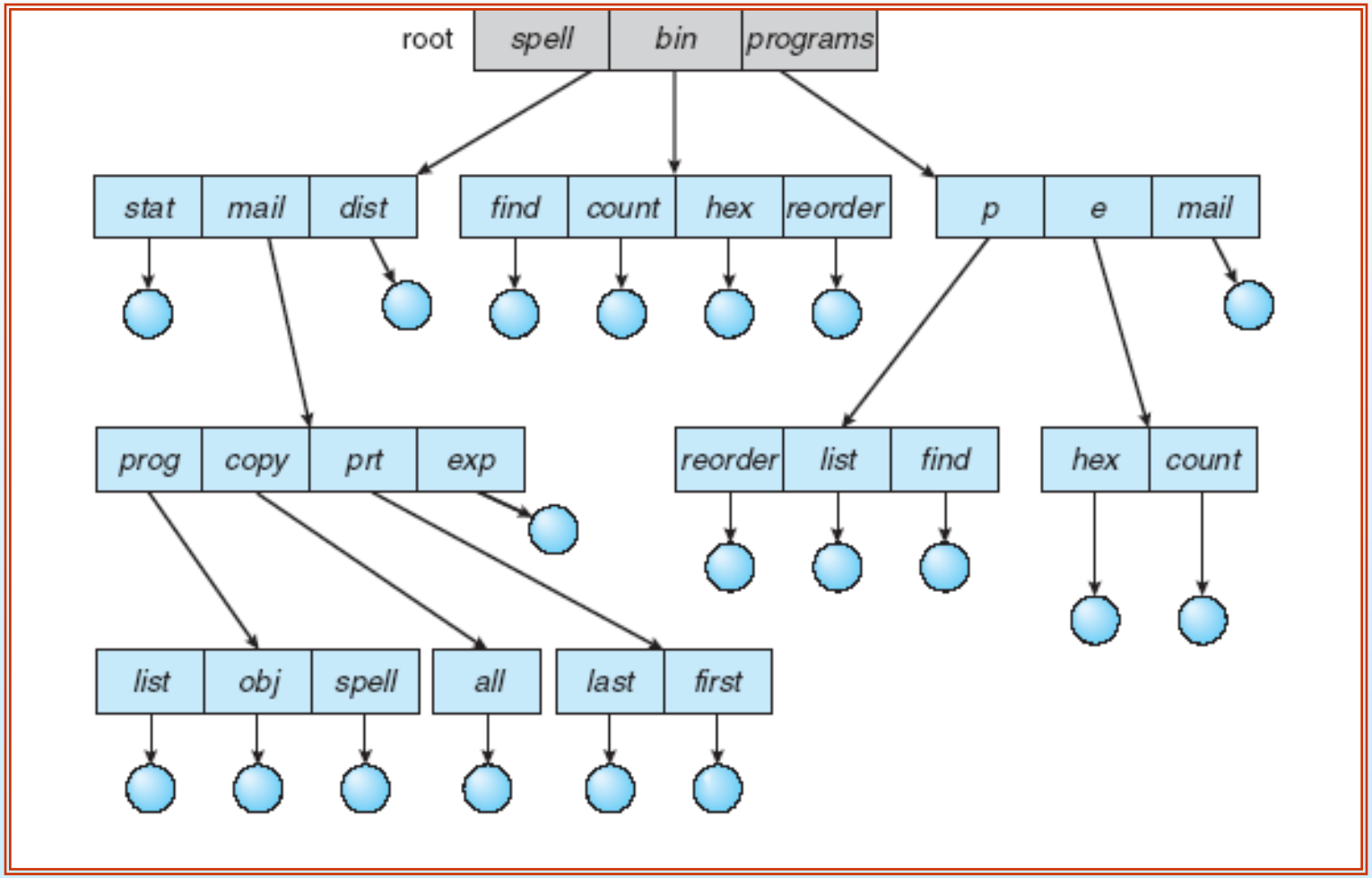

Tree-Structured Directories (Cont)

- Efficient searching
- Grouping Capability
- Current directory (working directory)
  - cd /spell/mail/prog
  - type list

Tree-Structured Directories (Cont)

- **Absolute** or **relative** path name
- Creating a new file is done in current directory
- Delete a file

  rm <file-name>
- Creating a new subdirectory is done in current directory

  mkdir <dir-name>

  Example: if in current directory /mail

  mkdir count

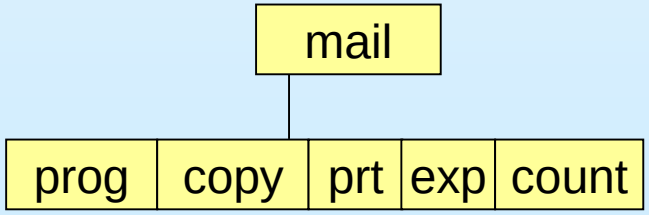

Deleting “mail” ⇒ deleting the entire subtree rooted by “mail”

Acyclic-Graph Directories

- Have shared subdirectories and files

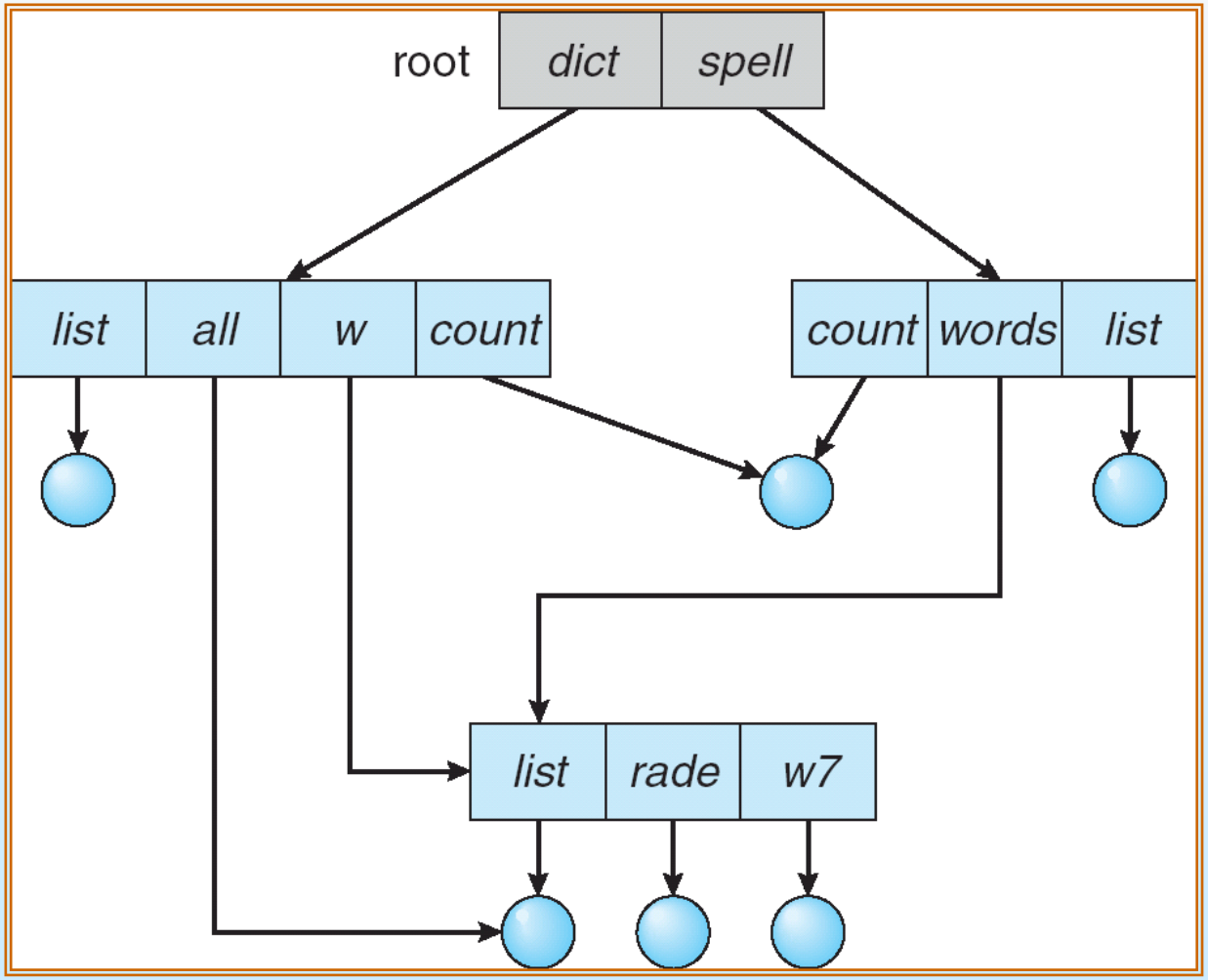

Acyclic-Graph Directories (Cont.)

- Two different names (aliasing)
- If *dict* deletes *list* $\Rightarrow$ dangling pointer

  Solutions:
  - Backpointers, so we can delete all pointers
    Variable size records a problem
  - Backpointers using a daisy chain organization
  - Entry-hold-count solution
- New directory entry type
  - **Link** – another name (pointer) to an existing file
  - **Resolve the link** – follow pointer to locate the file

General Graph Directory

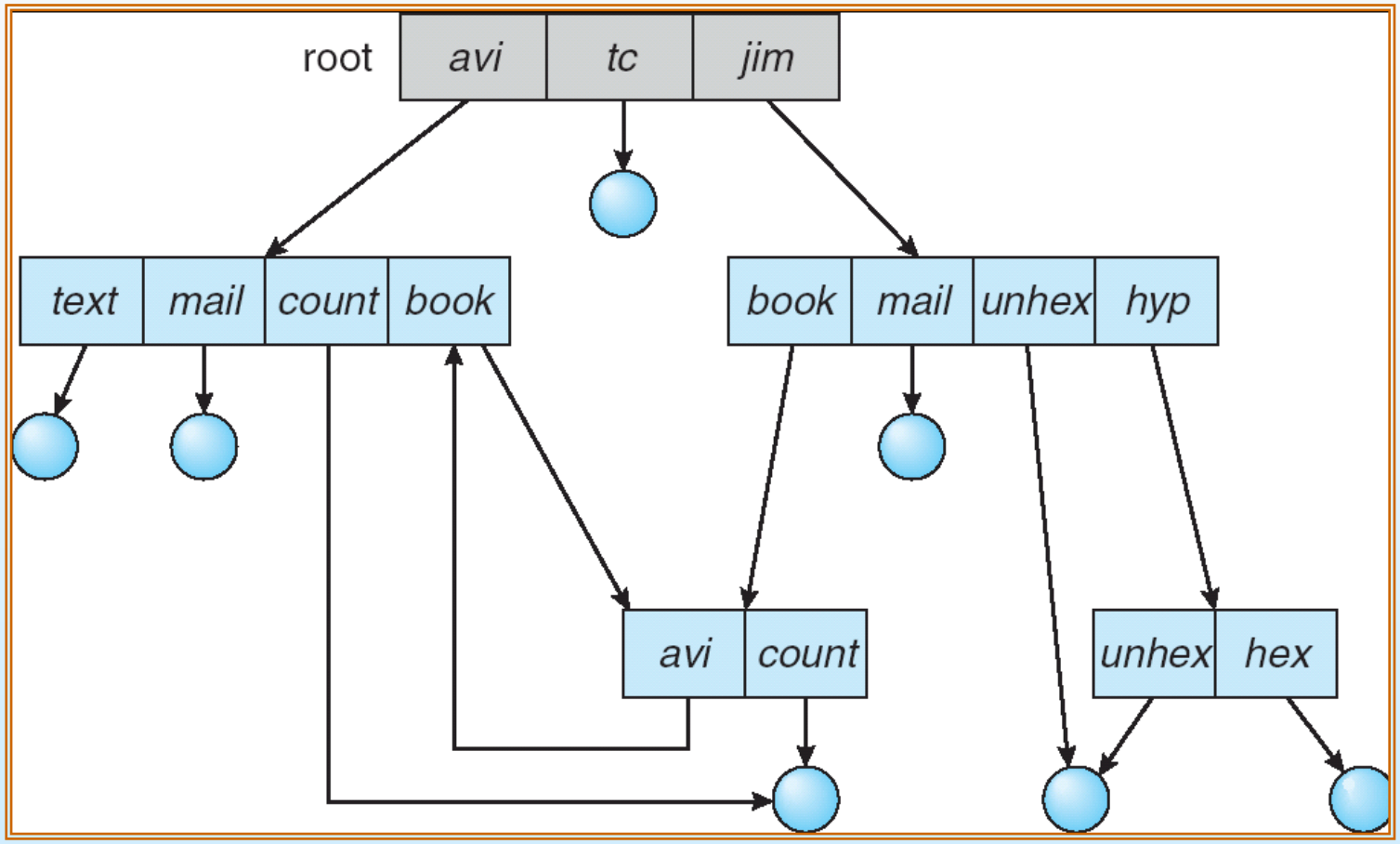

General Graph Directory (Cont.)

- How do we guarantee no cycles?
  - Allow only links to file not subdirectories
  - Garbage collection
  - Every time a new link is added use a cycle detection algorithm to determine whether it is OK

File Sharing

- Sharing of files on multi-user systems is desirable
- Sharing may be done through a **protection** scheme
- On distributed systems, files may be shared across a network
- Network File System (NFS) is a common distributed file-sharing method

File Sharing – Multiple Users

- **User IDs** identify users, allowing permissions and protections to be per-user
- **Group IDs** allow users to be in groups, permitting group access rights

File Sharing – Remote File Systems

- Uses networking to allow file system access between systems
  - Manually via programs like FTP
  - Automatically, seamlessly using **distributed file systems**
  - Semi automatically via the **world wide web**
- **Client-server** model allows clients to mount remote file systems from servers
  - Server can serve multiple clients
  - Client and user-on-client identification is insecure or complicated
  - **NFS** is standard UNIX client-server file sharing protocol
  - **CIFS** is standard Windows protocol
  - Standard operating system file calls are translated into remote calls
- Distributed Information Systems **(distributed naming services)** such as LDAP, DNS, NIS, Active Directory implement unified access to information needed for remote computing

File Sharing – Failure Modes

- Remote file systems add new failure modes, due to network failure, server failure
- Recovery from failure can involve state information about status of each remote request
- Stateless protocols such as NFS include all information in each request, allowing easy recovery but less security

File Sharing – Consistency Semantics

- **Consistency semantics** specify how multiple users are to access a shared file simultaneously
  - Similar to process synchronization algorithms
    - Tend to be less complex due to disk I/O and network latency (for remote file systems)
  - Andrew File System (AFS) implemented complex remote file sharing semantics
  - Unix file system (UFS) implements:
    - Writes to an open file visible immediately to other users of the same open file
    - Sharing file pointer to allow multiple users to read and write concurrently
  - AFS has session semantics
    - Writes only visible to sessions starting after the file is closed

Protection

- File owner/creator should be able to control:
  - what can be done
  - by whom
- Types of access
  - **Read**
  - **Write**
  - **Execute**
  - **Append**
  - **Delete**
  - **List**

Access Lists and Groups

- Mode of access: read, write, execute
- Three classes of users

			RWX
a) **owner access**	7	⇒	1 1 1
			RWX
b) **group access**	6	⇒	1 1 0
			RWX
c) **public access**	1	⇒	0 0 1

- Ask manager to create a group (unique name), say G, and add some users to the group.
- For a particular file (say *game*) or subdirectory, define an appropriate access.

owner group public

chmod 761 game

Attach a group to a file

chgrp G game

Windows XP Access-control List Management

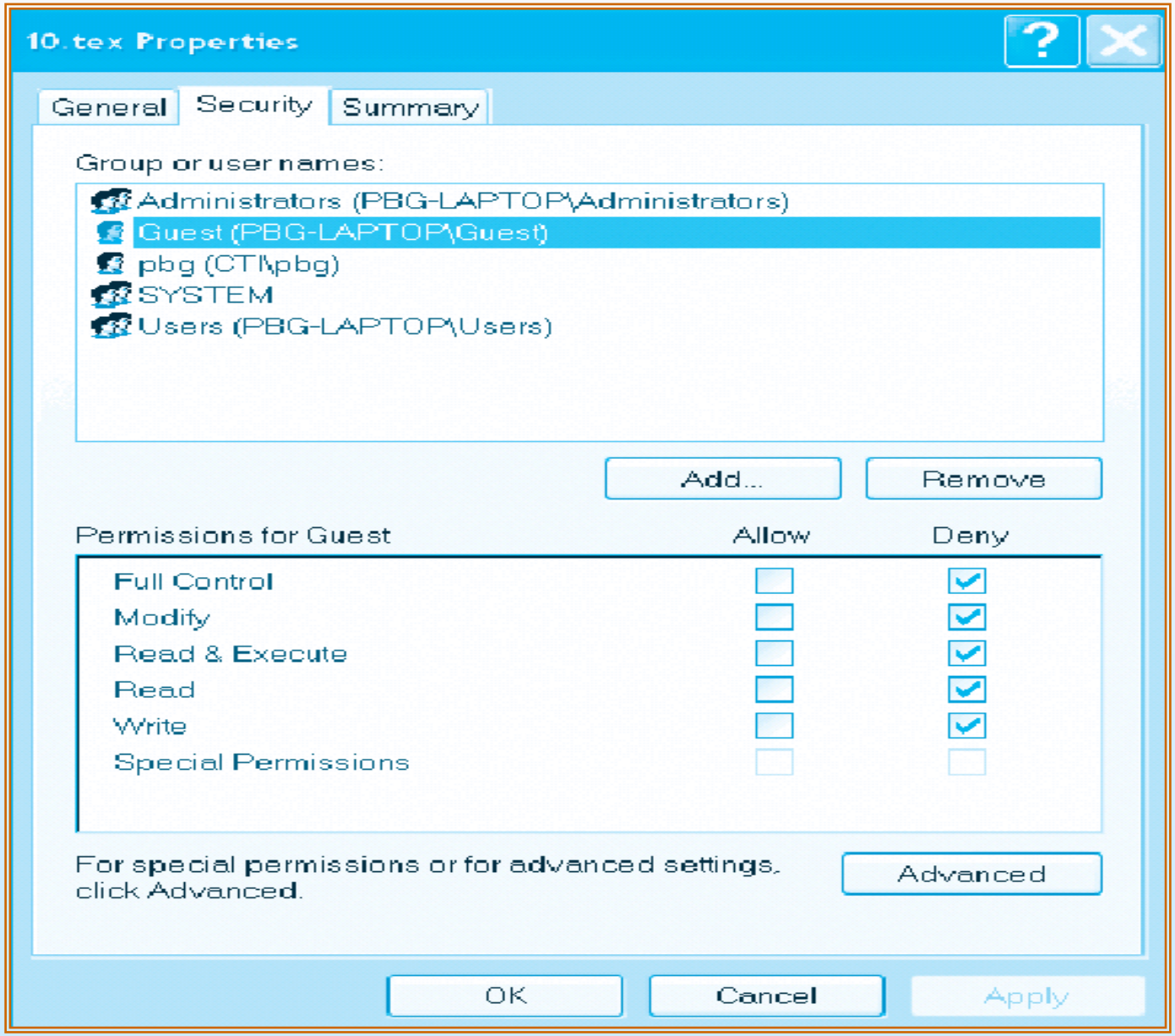

A Sample UNIX Directory Listing

-rw-rw-r--	1 pbg	staff	31200	Sep 3 08:30	intro.ps
drwx------	5 pbg	staff	512	Jul 8 09.33	private/
drwxrwxr-x	2 pbg	staff	512	Jul 8 09:35	doc/
drwxrwx---	2 pbg	student	512	Aug 3 14:13	student-proj/
-rw-r--r--	1 pbg	staff	9423	Feb 24 2003	program.c
-rwxr-xr-x	1 pbg	staff	20471	Feb 24 2003	program
drwx--x--x	4 pbg	faculty	512	Jul 31 10:31	lib/
drwx------	3 pbg	staff	1024	Aug 29 06:52	mail/
drwxrwxrwx	3 pbg	staff	512	Jul 8 09:35	test/

Chapter 12:
Implementing File Systems

Objectives

- To describe the details of implementing local file systems and directory structures
- To describe the implementation of remote file systems
- To discuss block allocation and free-block algorithms and trade-offs

File-System Structure

- File structure
  - Logical storage unit
  - Collection of related information
- File system resides on secondary storage (disks)
- File system organized into layers
- **File control block** – storage structure consisting of information about a file

Layered File System

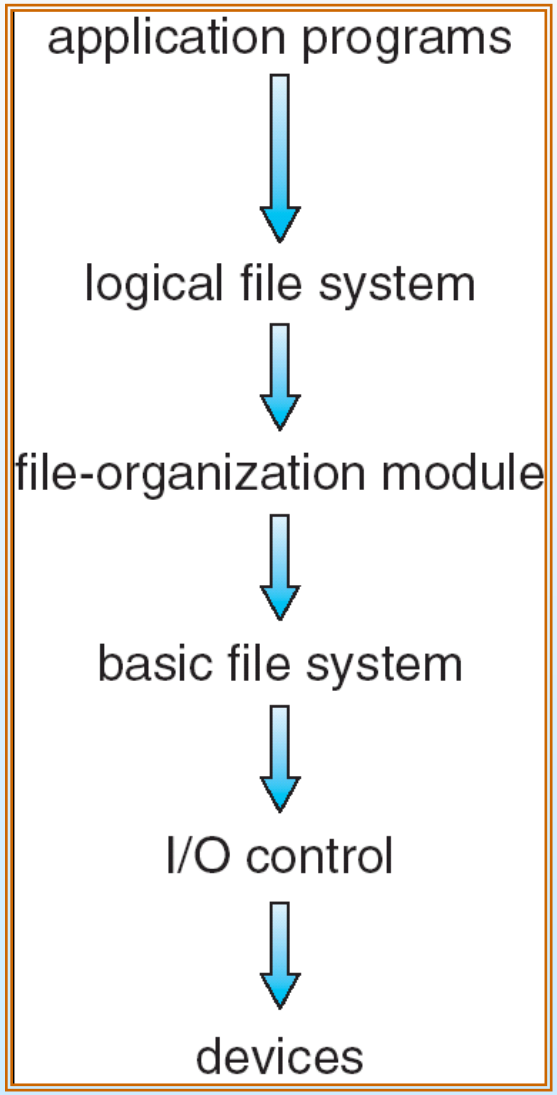

A Typical File Control Block

file permissions
file dates (create, access, write)
file owner, group, ACL
file size
file data blocks or pointers to file data blocks

In-Memory File System Structures

- The following figure illustrates the necessary file system structures provided by the operating systems.
- Figure 12-3(a) refers to opening a file.
- Figure 12-3(b) refers to reading a file.

In-Memory File System Structures

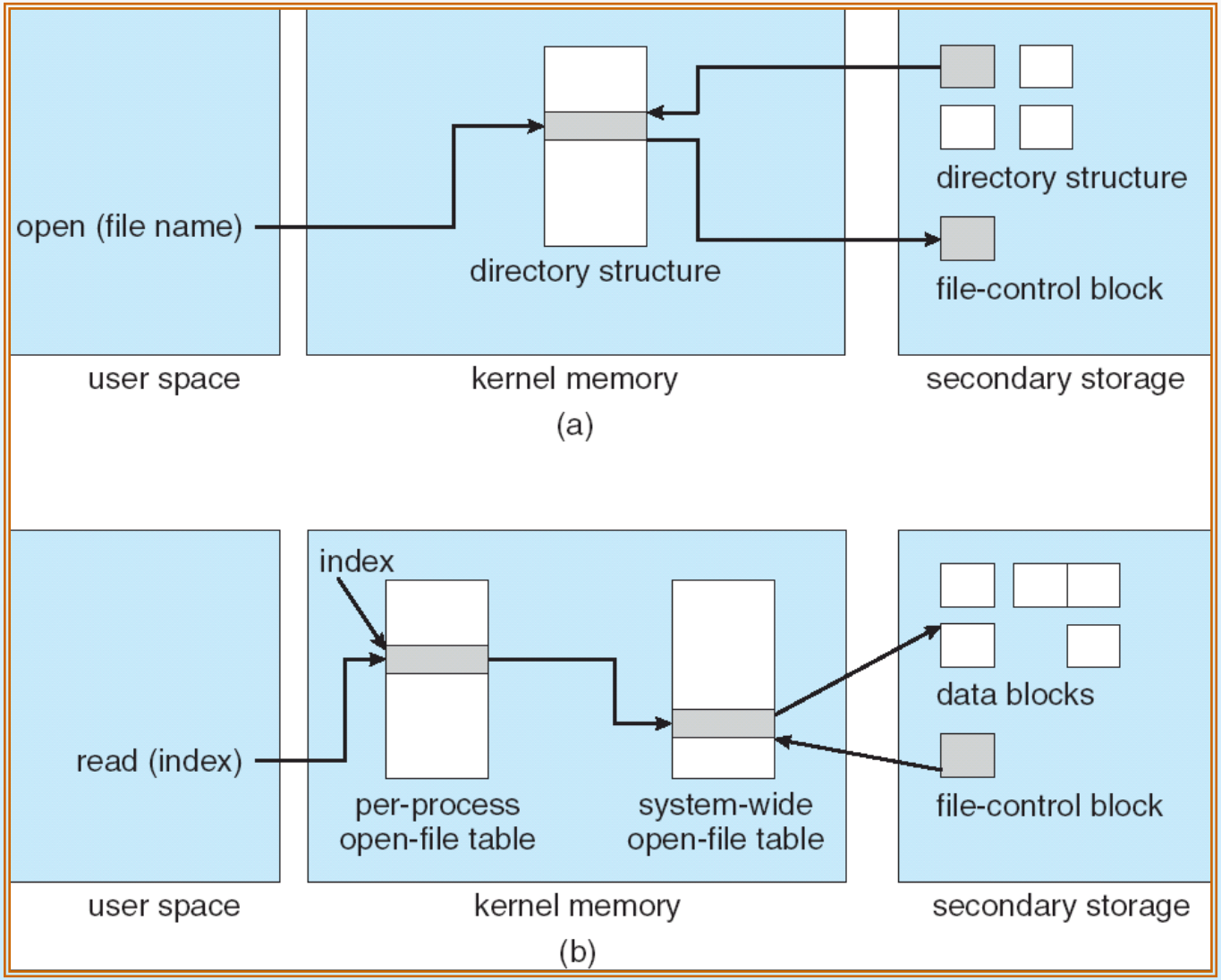

Virtual File Systems

- Virtual File Systems (VFS) provide an object-oriented way of implementing file systems.
- VFS allows the same system call interface (the API) to be used for different types of file systems.
- The API is to the VFS interface, rather than any specific type of file system.

Schematic View of Virtual File System

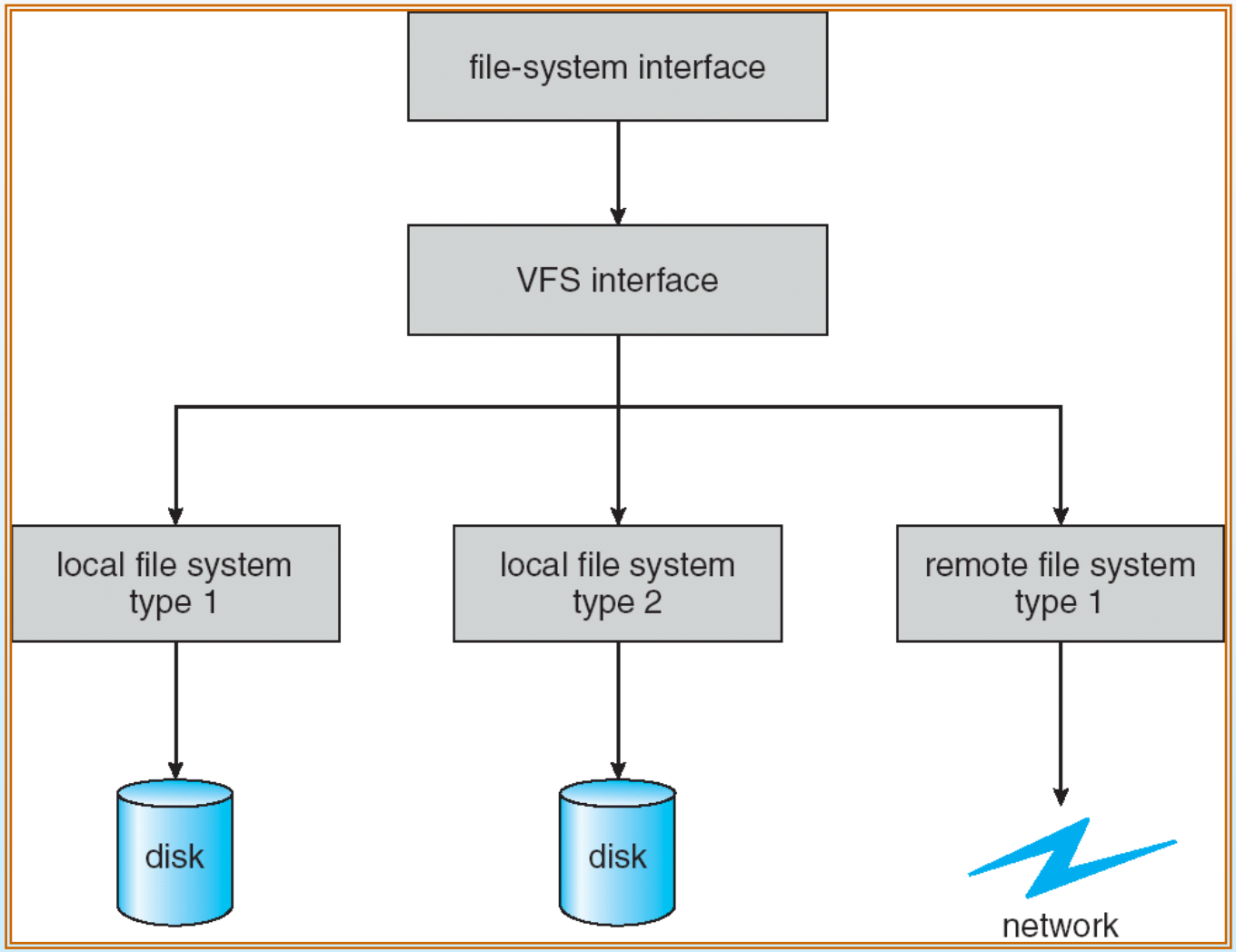

Directory Implementation

- **Linear list** of file names with pointer to the data blocks.
  - simple to program
  - time-consuming to execute
- **Hash Table** – linear list with hash data structure.
  - decreases directory search time
  - **collisions** – situations where two file names hash to the same location

Allocation Methods

- An allocation method refers to how disk blocks are allocated for files:
- **Contiguous allocation**
- **Linked allocation**
- **Indexed allocation**

Contiguous Allocation

- Each file occupies a set of contiguous blocks on the disk
- Simple – only starting location (block #) and length (number of blocks) are required
- Random access
- Wasteful of space (dynamic storage-allocation problem)
- Files cannot grow

Contiguous Allocation

- Mapping from logical to physical

LA/512 → Q, R

Block to be accessed = Q + starting address
Displacement into block = R

Contiguous Allocation of Disk Space

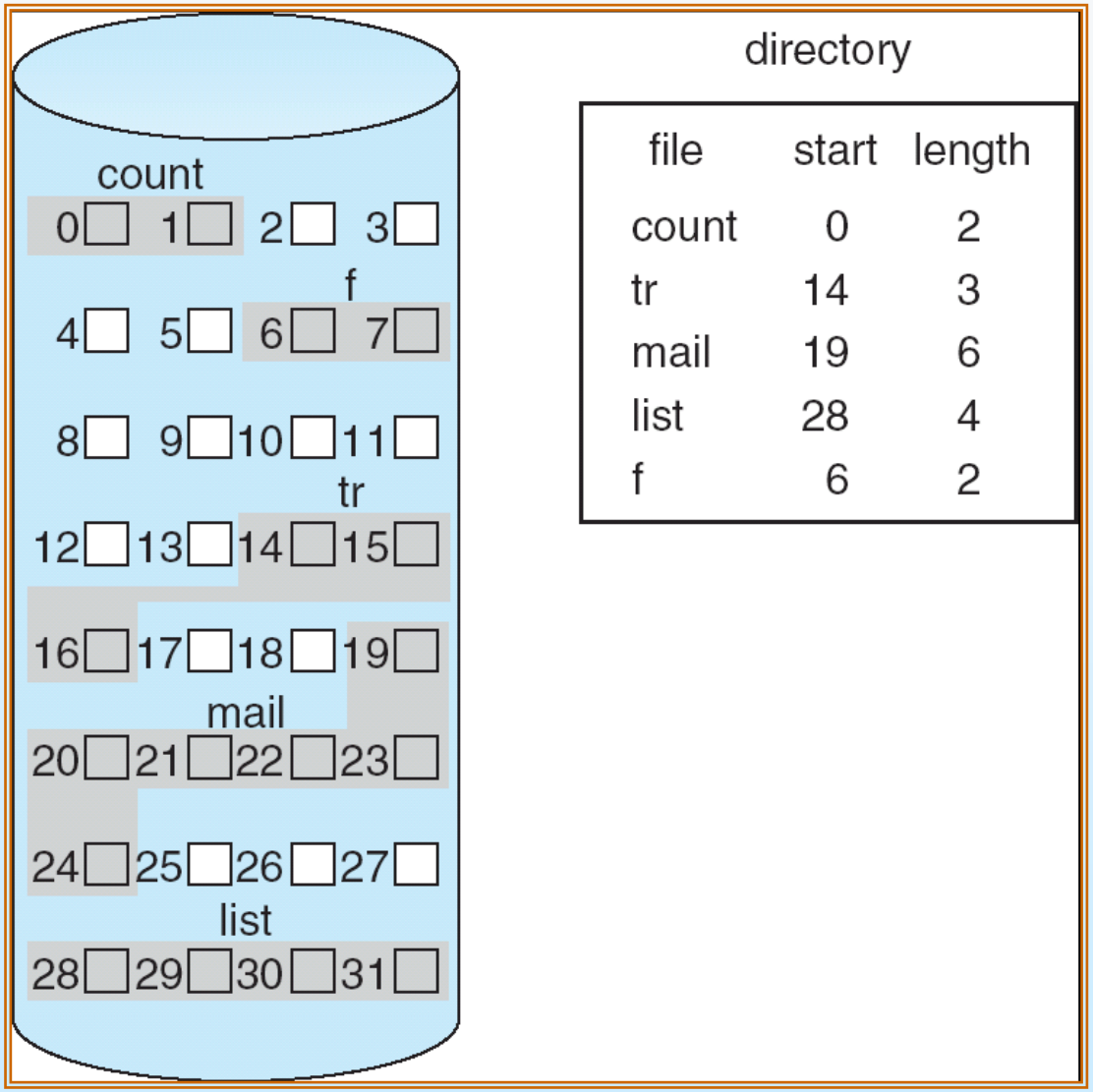

directory

file	start	length
count	0	2
tr	14	3
mail	19	6
list	28	4
f	6	2

Extent-Based Systems

- Many newer file systems (I.e. Veritas File System) use a modified contiguous allocation scheme
- Extent-based file systems allocate disk blocks in **extents**
- An **extent** is a contiguous block of disks
  - Extents are allocated for file allocation
  - A file consists of one or more extents.

Linked Allocation

- Each file is a linked list of disk blocks: blocks may be scattered anywhere on the disk.

block =

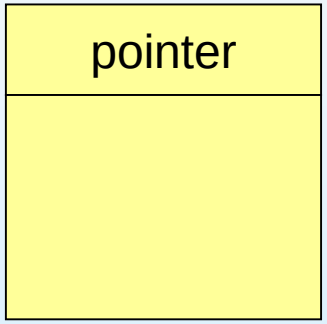

Linked Allocation (Cont.)

- Simple – need only starting address
- Free-space management system – no waste of space
- No random access
- Mapping

LA/511 → Q, R

Block to be accessed is the Qth block in the linked chain of blocks representing the file.
Displacement into block = R + 1

Linked Allocation

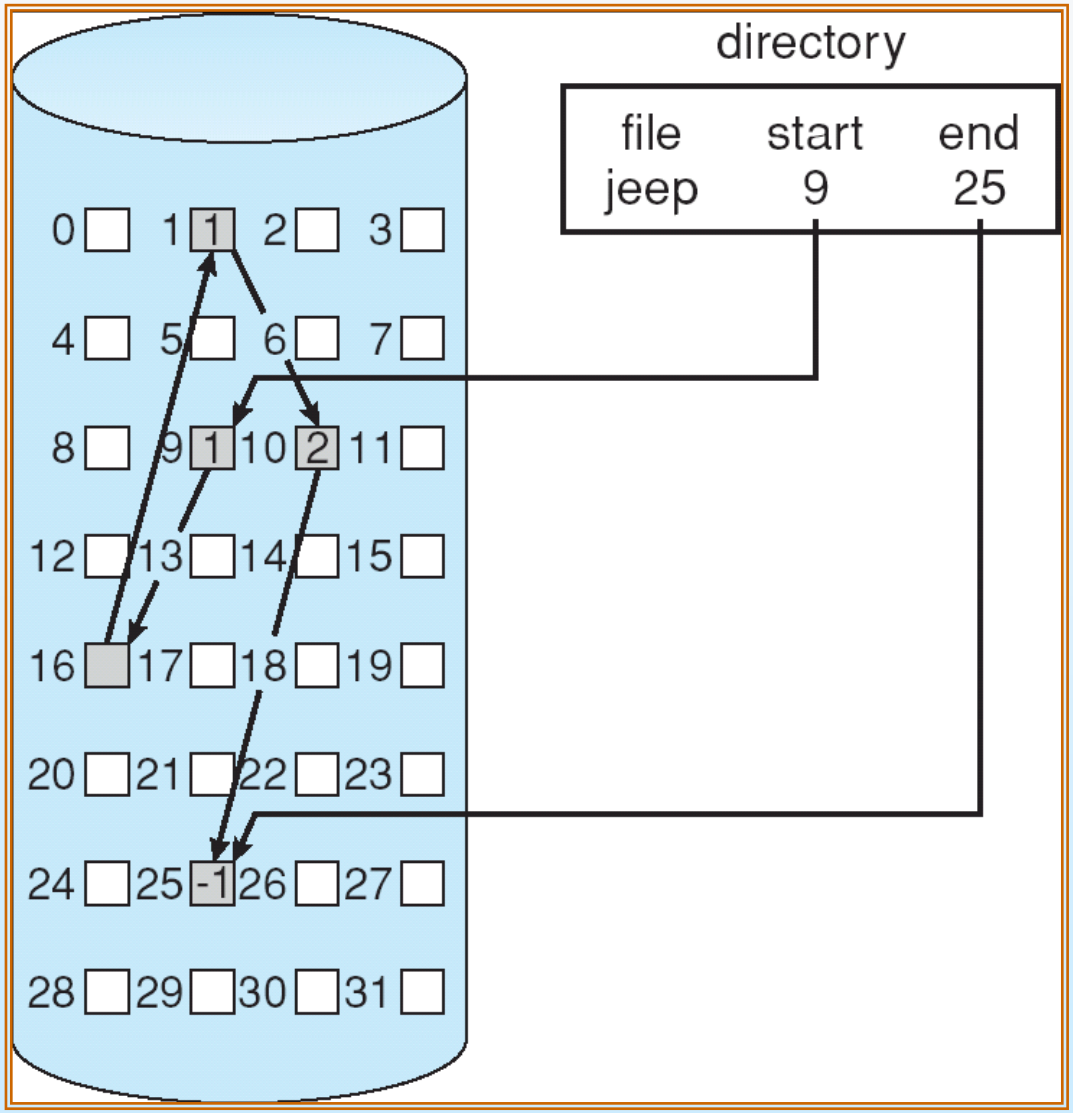

File-Allocation Table

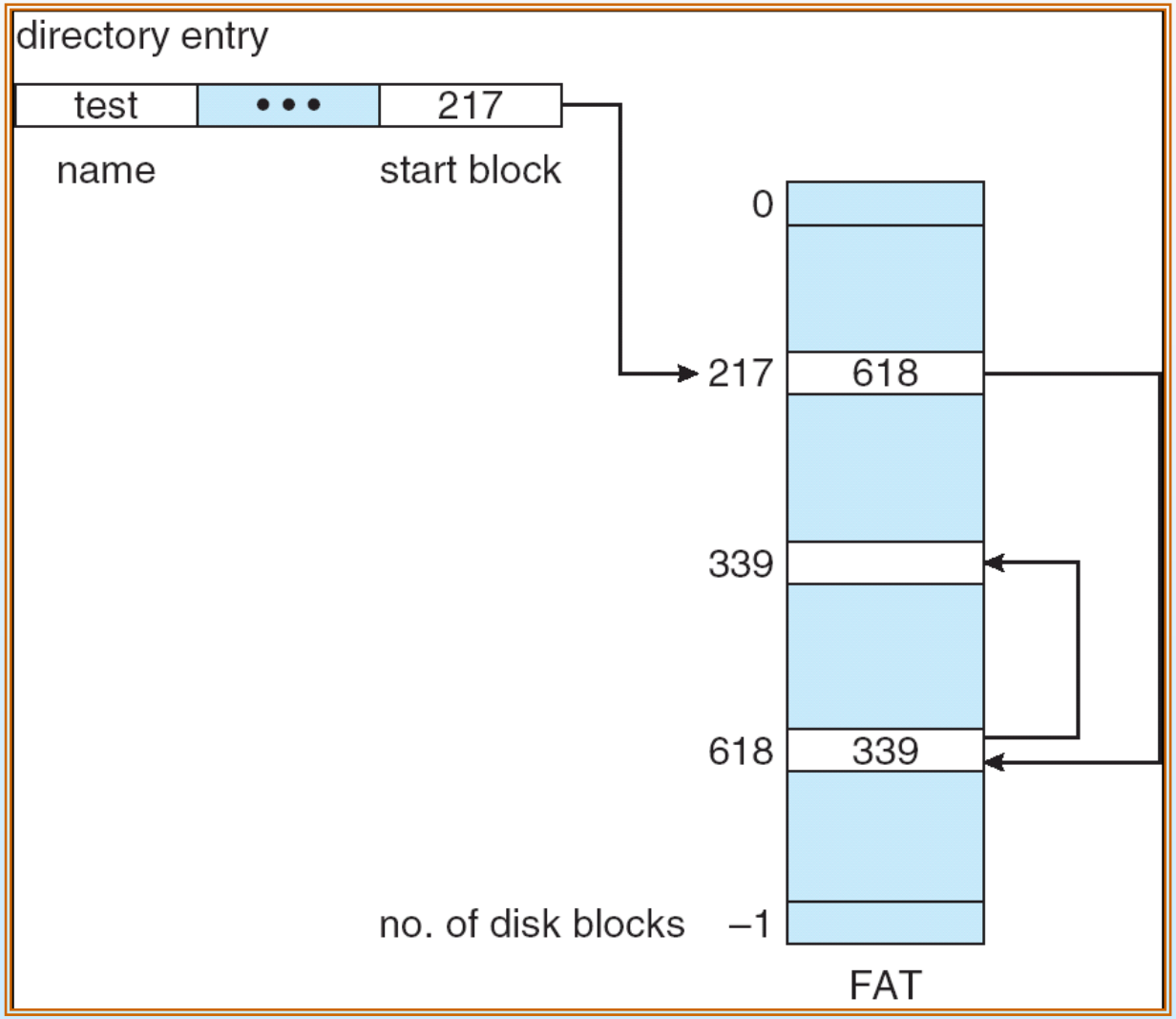

Indexed Allocation

- Brings all pointers together into the *index block.*
- Logical view.

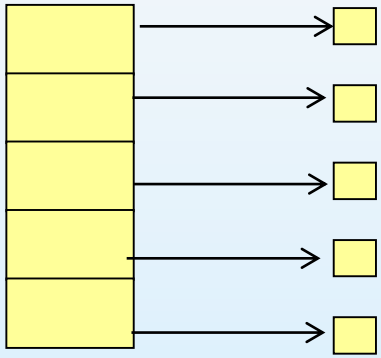

index table

Example of Indexed Allocation

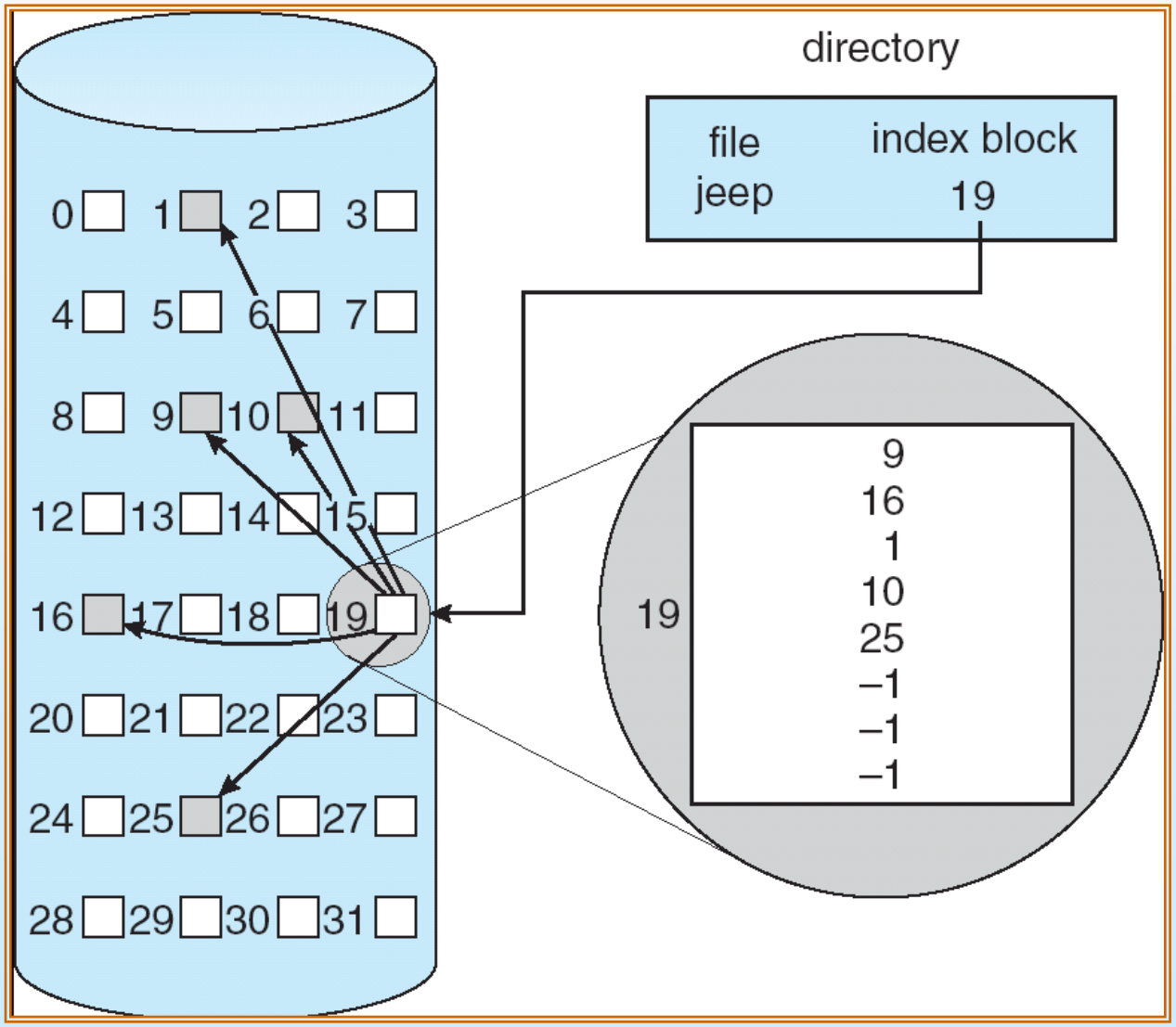

Indexed Allocation (Cont.)

- Need index table
- Random access
- Dynamic access without external fragmentation, but have overhead of index block.
- Mapping from logical to physical in a file of maximum size of 256K words and block size of 512 words. We need only 1 block for index table.

LA/512 → Q, R

Q = displacement into index table
R = displacement into block

Indexed Allocation – Mapping (Cont.)

- Mapping from logical to physical in a file of unbounded length (block size of 512 words).
- Linked scheme – Link blocks of index table (no limit on size).

$$LA / (512 \times 511) \begin{cases} Q_1 \\ R_1 \end{cases}$$

Q_1 = block of index table
R_1 is used as follows:

$$R_1 / 512 \begin{cases} Q_2 \\ R_2 \end{cases}$$

Q_2 = displacement into block of index table
R_2 displacement into block of file:

Indexed Allocation – Mapping (Cont.)

- Two-level index (maximum file size is 512^3)

$$LA / (512 \times 512) \begin{cases} Q_1 \\ R_1 \end{cases}$$

Q_1 = displacement into outer-index
R_1 is used as follows:

$$R_1 / 512 \begin{cases} Q_2 \\ R_2 \end{cases}$$

Q_2 = displacement into block of index table
R_2 displacement into block of file:

Indexed Allocation – Mapping (Cont.)

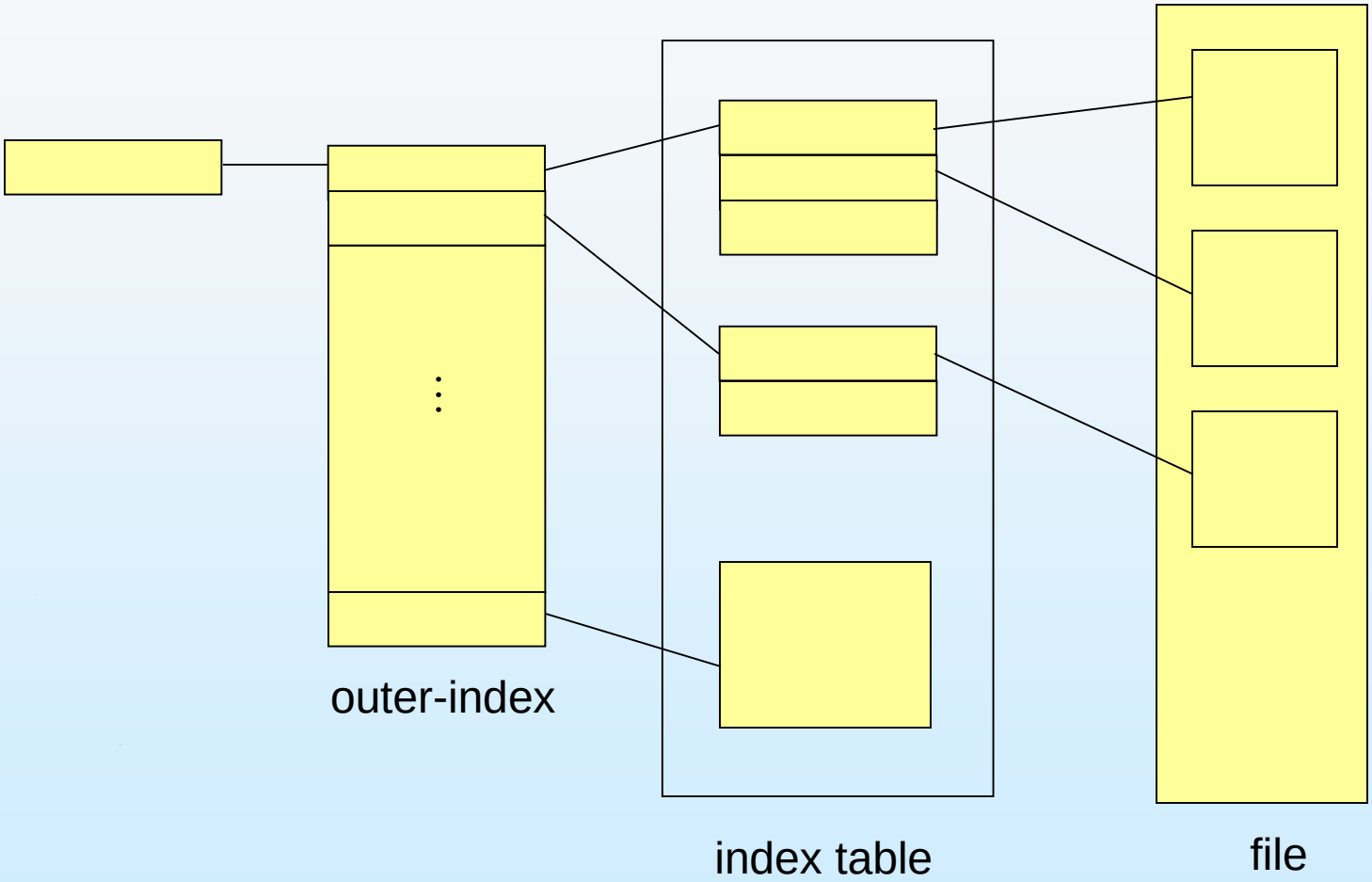

Combined Scheme: UNIX (4K bytes per block)

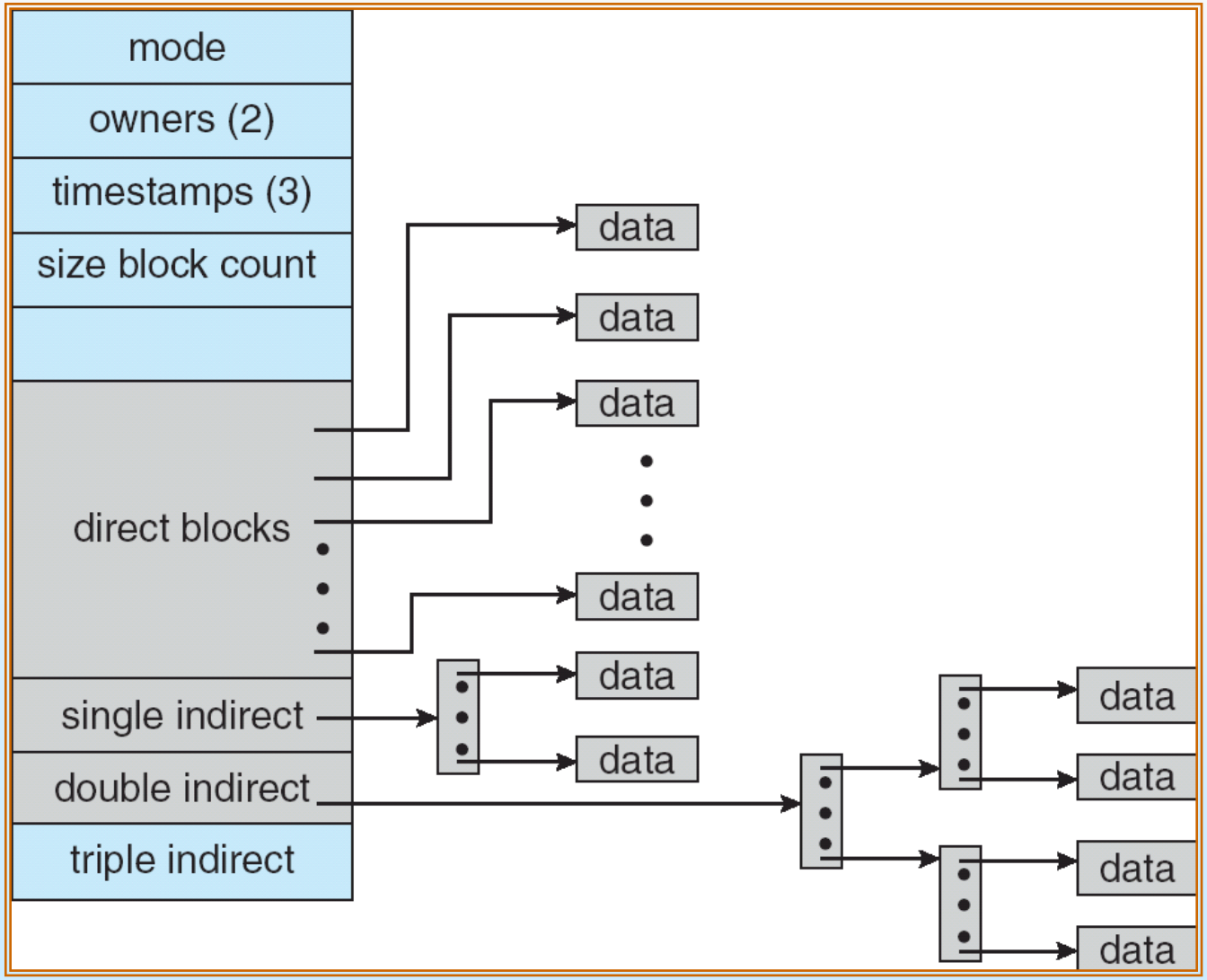

Free-Space Management

- Bit vector (*n* blocks)

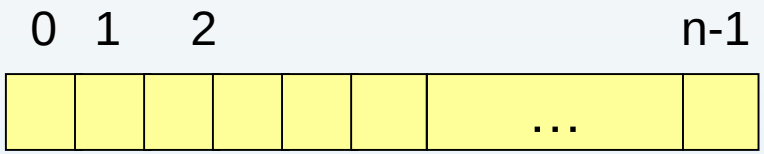

bit[*i*] = 1 ⇒ block[*i*] free

0 ⇒ block[*i*] occupied

Free-Space Management (Cont.)

- Bit map requires extra space
  - Example:

    block size = 2^{12} bytes

    disk size = 2^{30} bytes (1 gigabyte)

    $n = 2^{30}/2^{12} = 2^{18}$ bits (or 32K bytes)
- Easy to get contiguous files
- Linked list (free list)
  - Cannot get contiguous space easily
  - No waste of space

Free-Space Management (Cont.)

- Need to protect:
  - Pointer to free list
  - Bit map
    - Must be kept on disk
    - Copy in memory and disk may differ
    - Cannot allow for block[*i*] to have a situation where bit[*i*] = 1 in memory and bit[*i*] = 0 on disk
  - Solution:
    - Set bit[*i*] = 1 in disk
    - Allocate block[*i*]
    - Set bit[*i*] = 1 in memory

Directory Implementation

- Linear list of file names with pointer to the data blocks
  - simple to program
  - time-consuming to execute
- Hash Table – linear list with hash data structure
  - decreases directory search time
  - **collisions** – situations where two file names hash to the same location
  - fixed size

Linked Free Space List on Disk

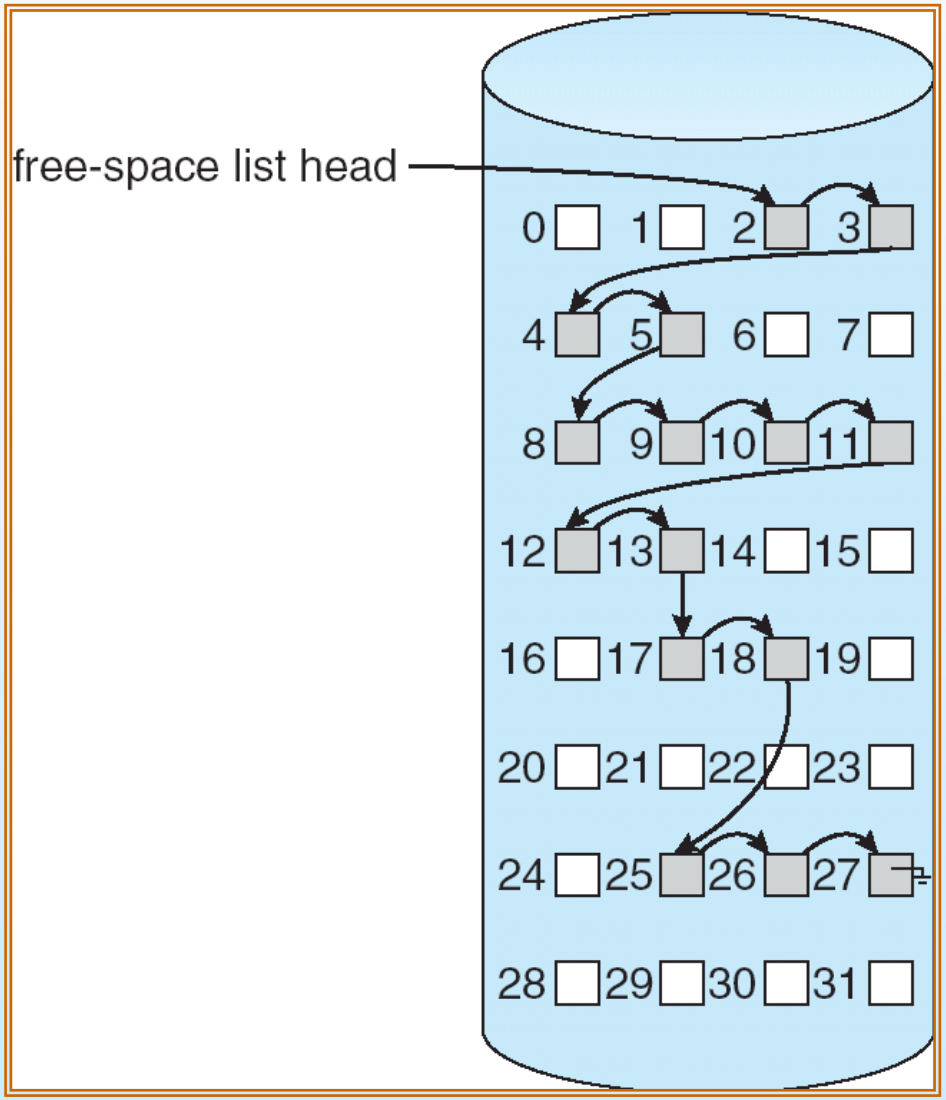

Efficiency and Performance

- Efficiency dependent on:
  - disk allocation and directory algorithms
  - types of data kept in file's directory entry
- Performance
  - disk cache – separate section of main memory for frequently used blocks
  - free-behind and read-ahead – techniques to optimize sequential access
  - improve PC performance by dedicating section of memory as virtual disk, or RAM disk

Recovery

- Consistency checking – compares data in directory structure with data blocks on disk, and tries to fix inconsistencies
- Use system programs to **back up** data from disk to another storage device (floppy disk, magnetic tape, other magnetic disk, optical)
- Recover lost file or disk by **restoring** data from backup

Log Structured File Systems

- **Log structured** (or journaling) file systems record each update to the file system as a **transaction**
- All transactions are written to a **log**
  - A transaction is considered **committed** once it is written to the log
  - However, the file system may not yet be updated
- The transactions in the log are asynchronously written to the file system
  - When the file system is modified, the transaction is removed from the log
- If the file system crashes, all remaining transactions in the log must still be performed